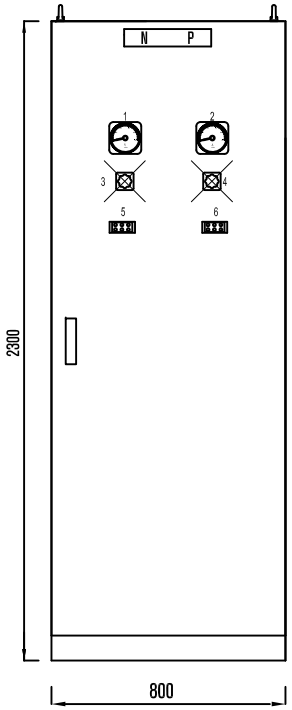

FRONT VIEW

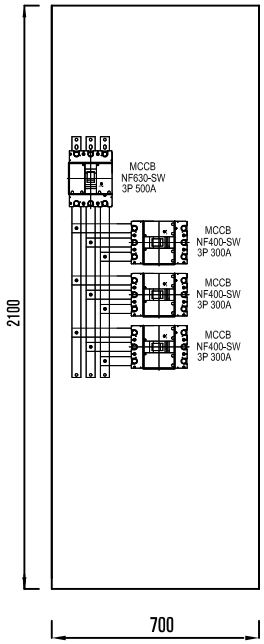

INNER VIEW

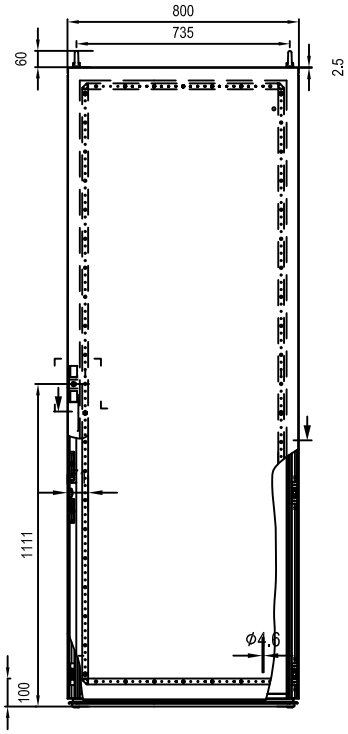

INNER SIDE VIEW

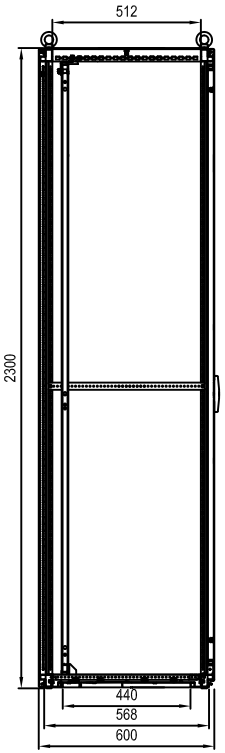

SIDE VIEW

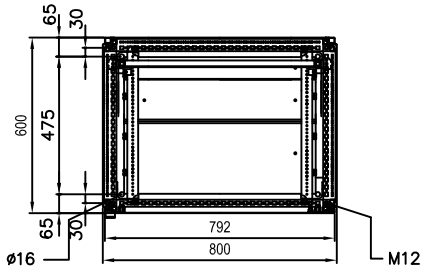

BUTTOM VIEW

EQUIPMENT LIST

NO	NAME	SPECIFICATION	MAKER
1	AC VOLTMETER	WA - V1 380/110V 0~600V	KyongBo
2	AC AMPERE METER	WA - A1 500/5A 0~500A	KyongBo
3	VOLTAGE SELECTOR S/W	3P 3W C-4210 110V 2.4A	Yong Sung
4	AMPERE SELECTOR S/W	3P 3W C-4307 110V 2.4A	Yong Sung
5	TEST TERMINAL	3P 3W PTT-03S 250V 10A	Yong Sung
6	TEST TERMINAL	3P 3W CTT-03S 250V 10A	Yong Sung

* REMARKS

1. PANEL DIMENSION : 800W*800D*2300H
2. BASE SIZE : 100*50 CHANNEL
3. TYPE : SELF STANDING
4. MATERIAL : STEEL
5. PAINTING : RAL 7035

REV.	DATE	DRN	CHKD	APPD	DESCRIPTION

CLIENT

CONTRACTOR

(주) 호 원 아 이 엔 씨
HOWON Instrument & control Co., Ltd.

PROJECT

KOC E&C JOB NO.

DRAWN

CHECKED

APPROVED

SCALE: N/A

DATE DRAWN

KOC E&C CLASSIFICATION NO.: -

TITLE: PDP PANEL
PANEL LAYOUT

DWG NO.:

CLIENT DWG NO.:

REV.

A3 (420 x 297 m/m)

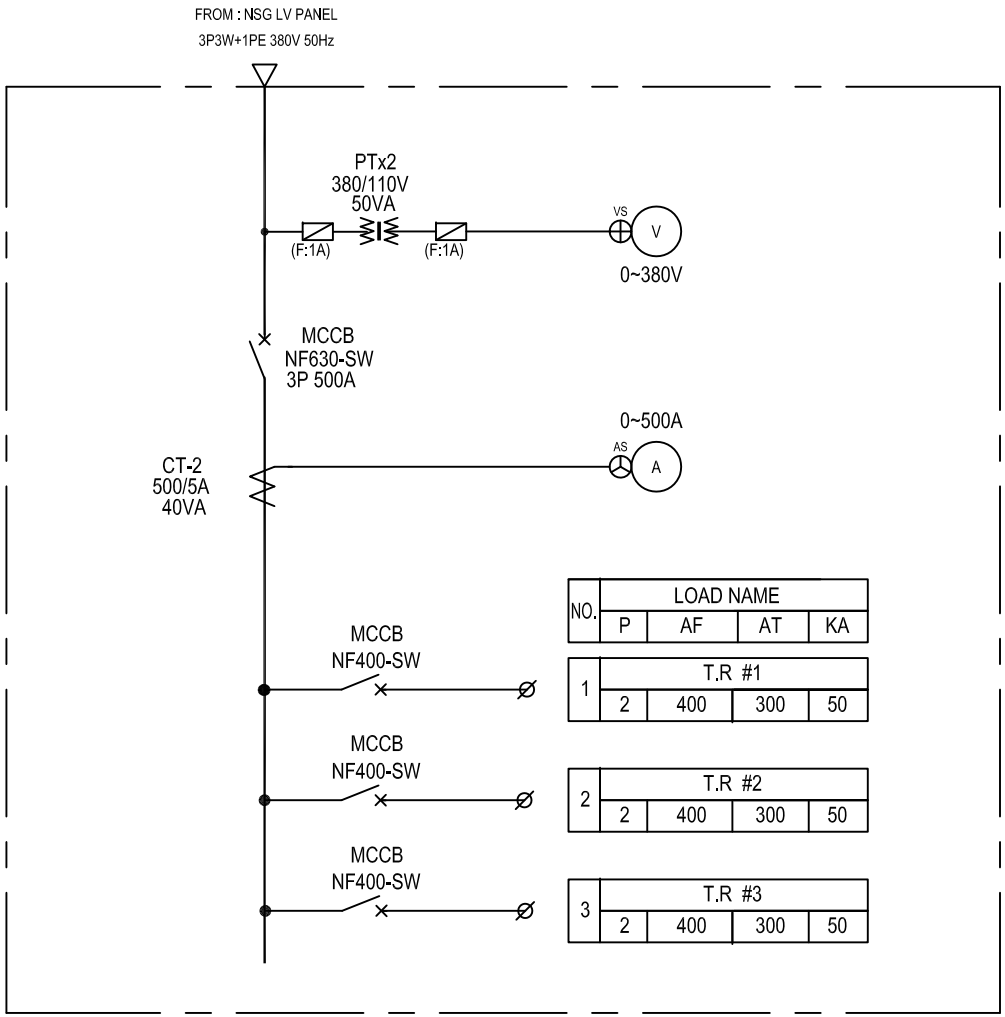

NO.	LOAD NAME			
	P	AF	AT	KA
1	T.R #1			
	2	400	300	50
2	T.R #2			
	2	400	300	50
3	T.R #3			
	2	400	300	50

REV.	DATE	DRN	CHKD	APPD	DESCRIPTION

CLIENT

CONTRACTOR

(주) 호 원 아 이 엔 씨
HOWON Instrument & control Co., Ltd.

PROJECT

KOC EBC JOB NO.

DRAWN

CHECKED

APPROVED

TITLE: PDP PANEL SINGLE LINE

SCALE: N/A

DATE DRAWN

DWG NO. :

REV.

KOC EBC CLASSIFICATION NO. : -

CLIENT DWG NO. :

REV.

A3 (420 x 297 m/m)

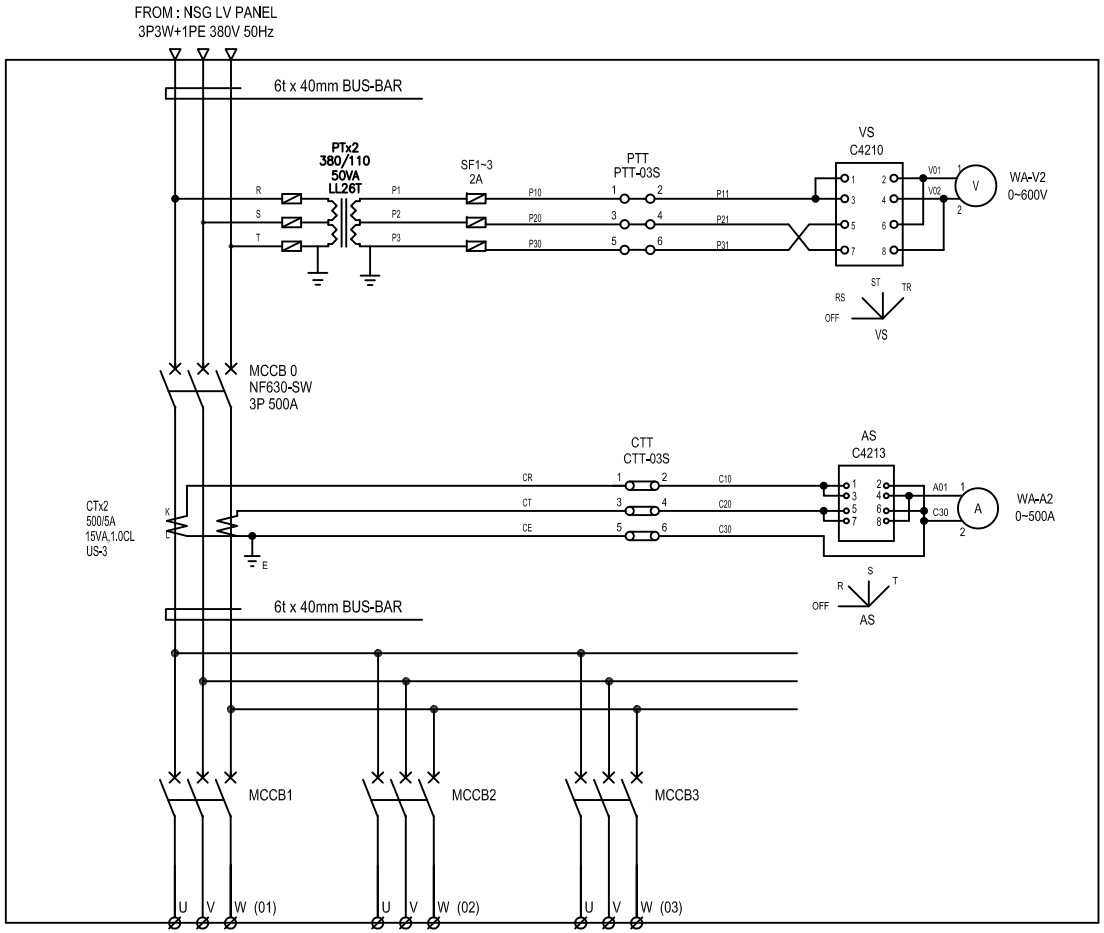

TR #1	TR #2	TR #3
MCCB 1 NF400-SW	MCCB 2 NF400-SW	MCCB 3 NF400-SW
2P 300A	2P 300A	2P 300A
50KA	50KA	50KA
95sq	95sq	95sq

EQUIPMENT LIST

NO	NAME	SPECIFICATION	MAKER	REMARK
1	AC VOLTMETER	WA - V1 380/110V 0~600V	KyongBo	
2	AC AMPERE METER	WA - A1 500/5A 0~500A	KyongBo	
3	VOLTAGE SELECTOR S/W	3P 3W C-4210 110V 2.4A	Yong Sung	
3	AMPERE SELECTOR S/W	3P 3W C-4307 110V 2.4A	Yong Sung	
4	TEST TERMINAL	3P 3W PTT-03S 250V 10A	Yong Sung	
5	TEST TERMINAL	3P 3W CTT-03S 250V 10A	Yong Sung	
6	POTENTIAL TRANSFORMER	380/110V 50VA LL-22	KyongBo	
7	CURRENT TRANSFORMER	500/5A 15VA US-3	KyongBo	
8	FUSE & HOLDER	250V 2A HY-30	HanYoung	
9	MCCB	NF630-SW 3P 600A	Mitsubishi	
10	MCCB	NF400-SW 2P 300A	Mitsubishi	

REV.	DATE	DRN	CHKD	APPD	DESCRIPTION

CLIENT

CONTRACTOR

(주) 호 원 아 이 엔 씨
HOWON Instrument & control Co., Ltd.

PROJECT

KOC E&C JOB NO.
DRAWN
CHECKED
APPROVED

TITLE: PDP PANEL THREE LINE

SCALE: N/A
DATE DRAWN
DWG NO. :
REV.
KOC E&C CLASSIFICATION NO. : -
CLIENT DWG NO. :
REV.

A3 (420 x 297 m/m)

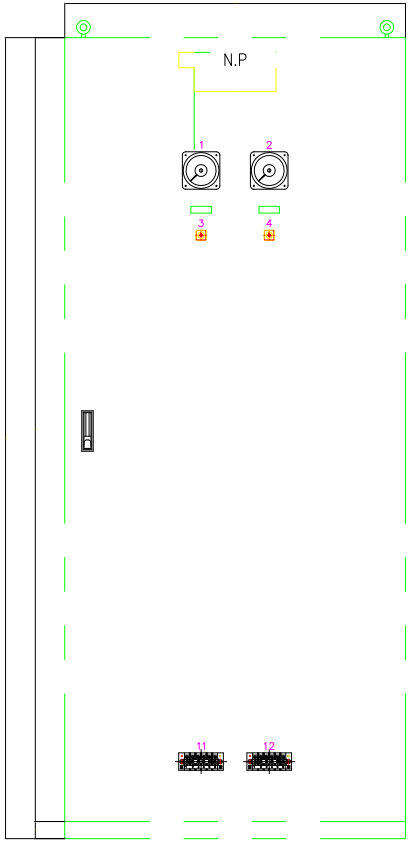

FRONT VIEW

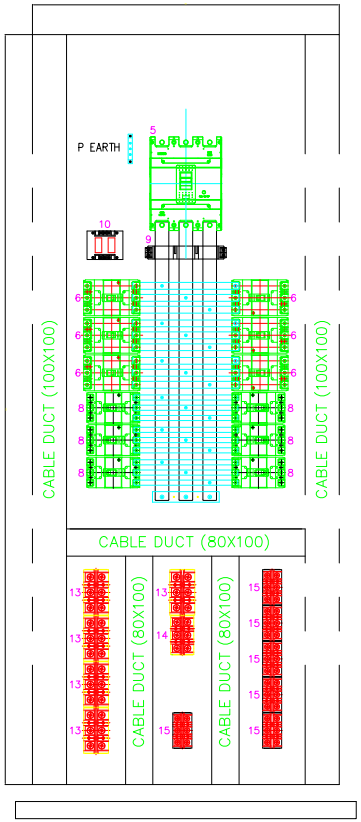

INNER VIEW

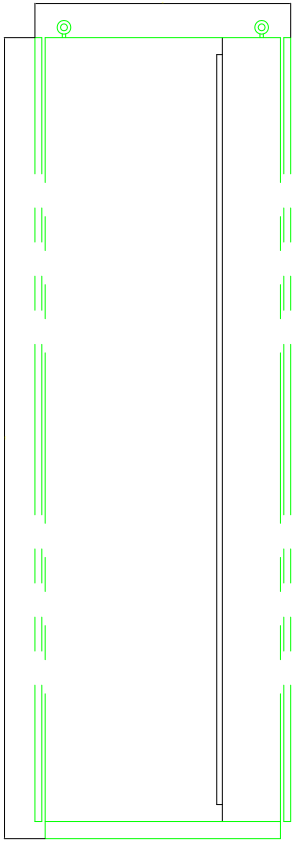

SIDE VIEW

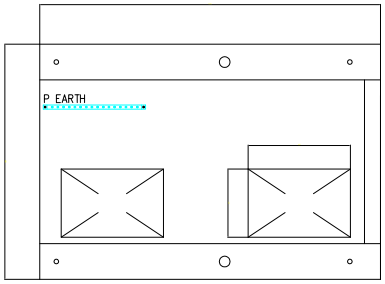

BOTTOM VIEW

MATERIAL LIST

NO.	ITEM	DESCRIPTION	Q'ty	MAKER
1	VOLTAGE METER	10 ~ 600V	1	광성
2	AMPERE METER	1 ~ 5A	1	광성
3	VS	3P 3W 2 P.T	1	한영
4	AS	3P 3W 2 C.T	1	한영
5	MCCB	3P 700A	1	LSIS
6	MCCB	3P 225A	5	LSIS
7	MCCB	3P 150A	1	LSIS
8	MCCB	3P 100A	6	LSIS
9	C.T	700/5A 15VA 1.0 CLASS	1	광성
10	P.T	440V/110V	1	광성
11	CTT	CURRENT 3P SET	1	용성
12	PTT	POTENTIAL 3P SET	1	용성
13	TERMINAL BLOCK	300A	5	KOINO
14	TERMINAL BLOCK	150A	1	KOINO
15	TERMINAL BLOCK	100A	6	KOINO

GENERAL SPECIFICATION

1. ENCLOSER : SELF STANDING
2. DOOR : 3.2t/BODY : 2.3t
3. COLOR : RAL 7032
4. DIMENSION : 1000(W)X 2350(H) X 750(D)

REV.	DATE	DRN	CHKD	APPD	DESCRIPTION
△					

CLIENT

CONTRACTOR

VENDER: (주) 호원아이엔씨 HOWON Instrument & control Co., Ltd.

PROJECT

TITLE: PDP #1 PANEL LAY OUT FOR DIAGRAM

DRAWN

CHECKED

APPROVED

SCALE: N/A

DATE DRAWN

DWG NO. :

REV. △

CLIENT DWG NO. :

REV. △

A3 (420 x 297 m/m)

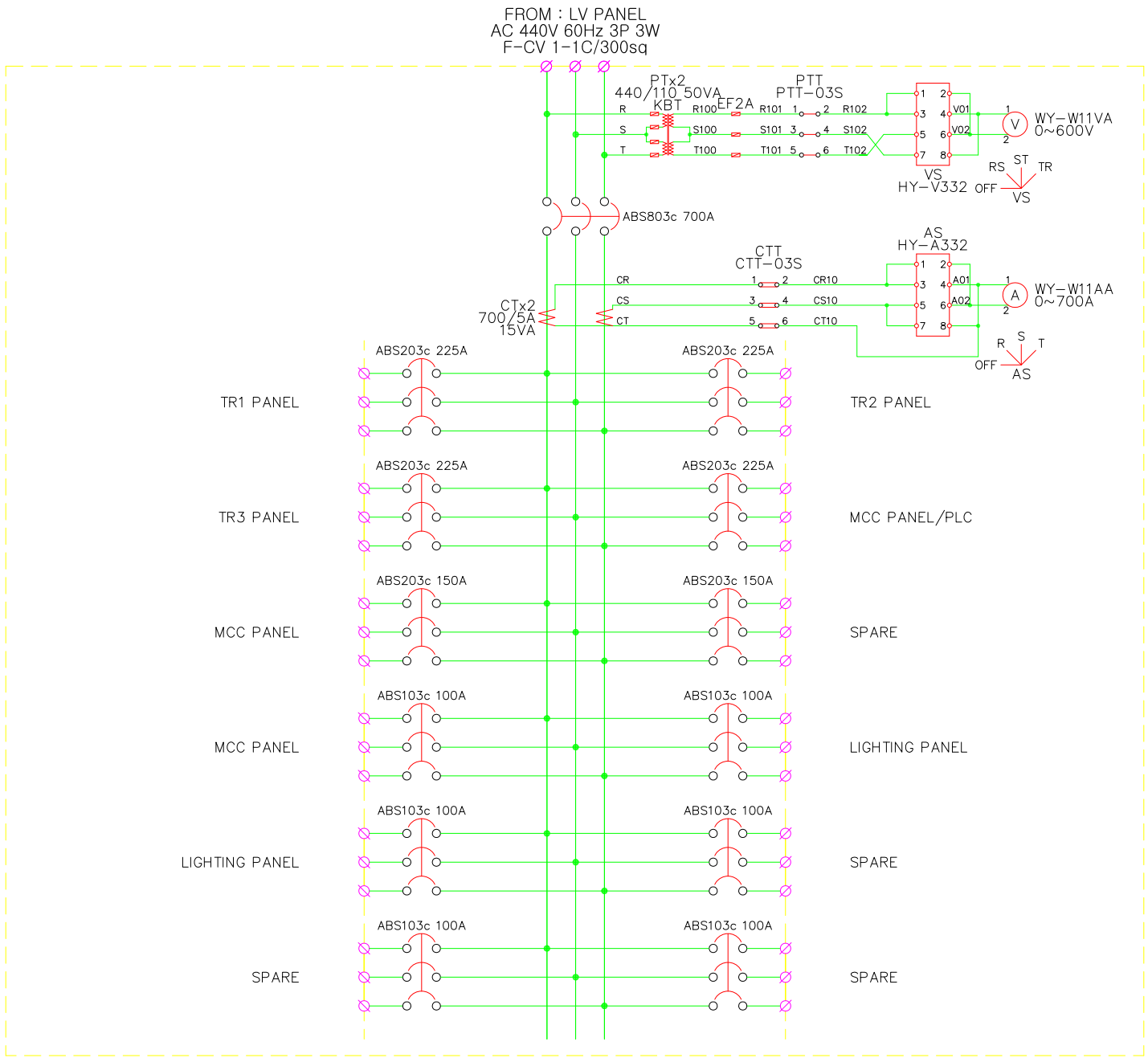

REV.	DATE	DRN	CHKD	APPD	DESCRIPTION

CLIENT

CONTRACTOR

VENDER (주) 호원아이엔씨
HOWON Instrument & control Co., Ltd.

PROJECT

DRAWN
CHECKED
APPROVED

TITLE
PDP #1 PANEL
SEQUENCE DIAGRAM

SCALE N/A
DATE DRAWN
DWG NO. :
REV.
CLIENT DWG NO. :
REV.

A3 (420 x 297 m/m)

PARTS LIST

NO.	ITEM	ORDER NO.	SPECIFICATION	MAKER	UNIT	Q'ty	NO.	ITEM	ORDER NO.	SPECIFICATION	MAKER	UNIT	Q'ty
1	PANEL		1000(W) X 2350(H) X 750(D)		면	1	41						
2	MCCB	ABS803c 700A	3P 700A	LSIS	EA	1	42						
3	MCCB	ABS203c 225A	3P 225A	LSIS	EA	5	43						
4	MCCB	ABS203c 150A	3P 150A	LSIS	EA	1	44						
5	MCCB	ABS103c 100A	3P 100A	LSIS	EA	6	45						
6	C.T	KBF-62	700/5A 15VA 1.0 CLASS	KWANGSUNG	EA	1	46						
7	P.T	KBT	440V/110V 50VA	KWANGSUNG	EA	1	47						
8	CTT	YSCTT-03S	CURRENT 3P SET	YONGSUNG	EA	1	48						
9	PTT	YSPTT-03S	POTENTIAL 3P SET	YONGSUNG	EA	1	49						
10	VOLTAGE METER	WY-W11VA	0 ~ 600V	KWANGSUNG	EA	1	50						
11	AMPERE METER	WY-W11AA	0 ~ 700A	KWANGSUNG	EA	1	51						
12	VS	HY-V332	3P 3W 2 P.T	HANYOUNG	EA	1	52						
13	AS	HY-A332	3P 3W 2 C.T	HANYOUNG	EA	1	53						
14	TERMINAL BLOCK	KH-60300-3P	300A	KOINO	EA	5	54						
15	TERMINAL BLOCK	KH-60150-3P	150A	KOINO	EA	1	55						
16	TERMINAL BLOCK	KH-60100-3P	100A	KOINO	EA	6	56						
17							57						
18							58						
19							59						
20							60						
21							61						
22							62						
23							63						
24							64						
25							65						
26							66						
27							67						
28							68						
29							69						
30							70						
31							71						
32							72						
33							73						
34							74						
35							75						
36							76						
37							77						
38							78						
39							79						
40							80						

REV.	DATE	DRN	CHKD	APPD	DESCRIPTION
△					

CLIENT

CONTRACTOR

VENDER (주) 호원아이엔씨
HOWON Instrument & control Co., Ltd.

PROJECT

TITLE
PDP #1 PANEL
PARTS LIST

DRAWN
CHECKED
APPROVED

SCALE N/A | DATE DRAWN | DWG NO. : | REV. △

CLIENT DWG NO. : | REV. △

A3 (420 x 297 m/m)

THIS DRAWING AND THE DESIGN SHOWN ARE THE PROPERTY OF HOWONINC AND MUST NOT BE USED OR COPIED WITHOUT THEIT PERMISSION

DISTRIBUTION PANEL #2(DP-002)
3P 4W 380V 50HZ, PE
FROM: LIGHTING PANEL

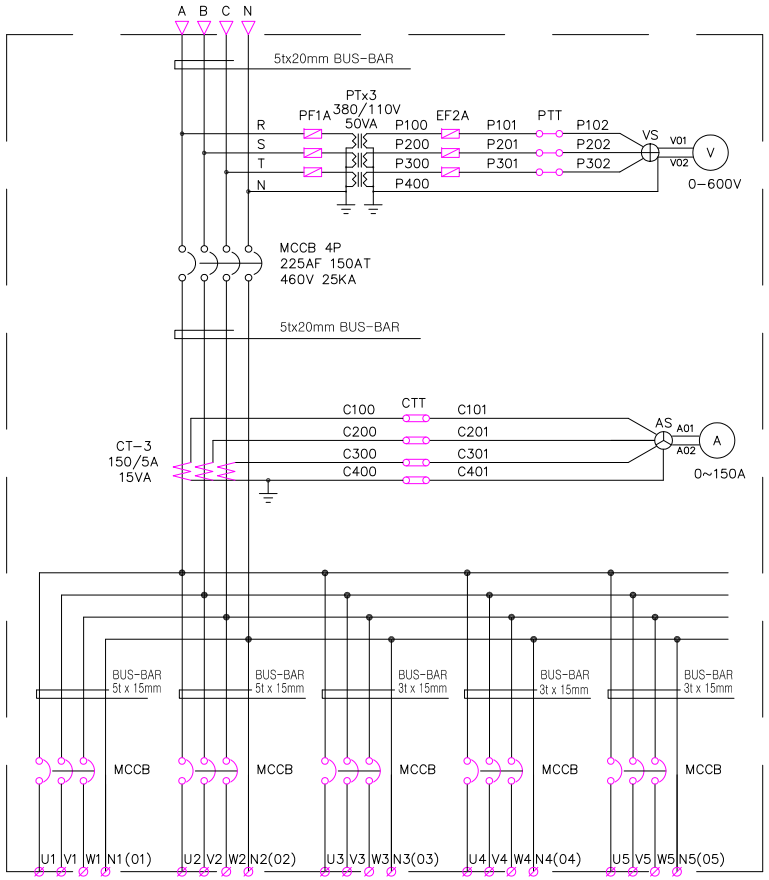

L - 1M	L - 2M	L - 3M	L - 4M	L - 5M
MCCB 3P	MCCB 3P	MCCB 3P	MCCB 3P	MCCB 3P
100/75AT	100/75AT	100/50AT	100/50AT	100/50AT
25KA	25KA	10KA	10KA	10KA
16sq	16sq	10sq	10sq	10sq

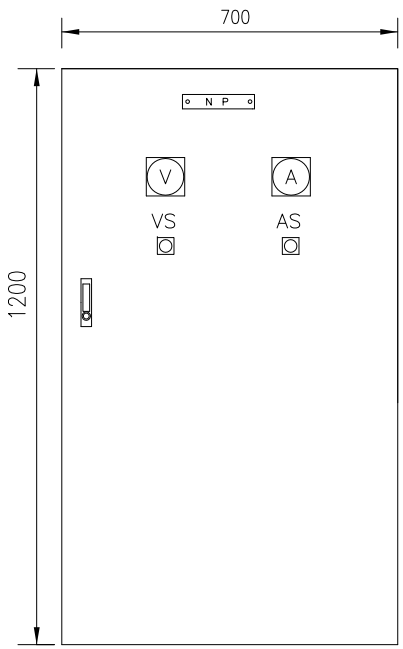

FRONT VIEW

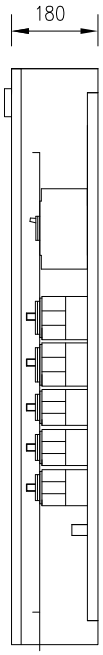

IN SIDE VIEW

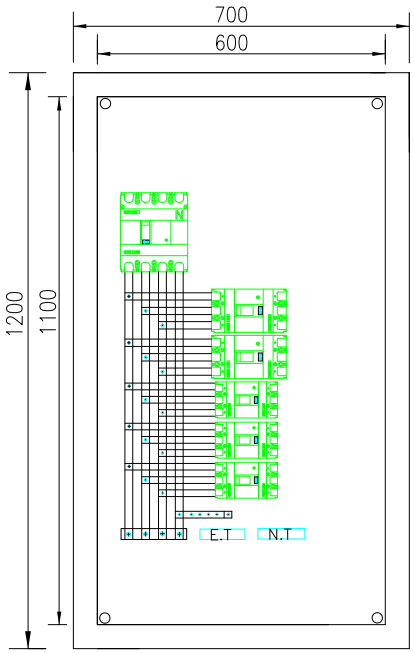

IN FRONT VIEW

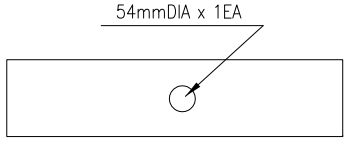

TOP VIEW

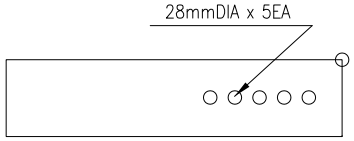

BOTTOM VIEW

NOTE

1. TYPE : DUST PROOF WALL MOUNTING
2. MAT'L : BOX-STEEL 2.0mm
   DOOR-STEEL 2.0mm
   OTHER-STEEL 2.0mm
3. PAINTTING COLOR : EX4504(S) 5Y7/1
4. MCCB : MAIN - 3P L.S I.S
   FEEDER - 3P L.S I,S
5. METER : 80x80 Wide Angle - KyongBo

NO.	REVISION	DATE	NAME
△			
△			
△			

(주) 호원아이엔씨
HOWON Instrument & control Co., Ltd.

DRAWN BY	DEGIGNED BY	MODEL		DRAWING NO.	
CHECKED BY	APPROVED BY	TITLE	DISTRIBUTION PANEL #2 (DP-002)		1/NON

No.	ITEM	DESCRIPTION	REMARK
1	TYPE	SELF STANDING	
2	MATERIAL	STEEL	
3	THICKNESS	BOX & DOOR : 2.6mm	
		PLATE : 2.0mm	
		P COVER : 1.6mm	
4	COLOR	RAL 7032	
5	P-COVER	DOOR TYPE	
6	ENCLOSURE	RITTAL IP55	
7	DIMENSION	W1000xD800xH2300	
8	PANEL NAME	POWER DISTRIBUTION PANEL	

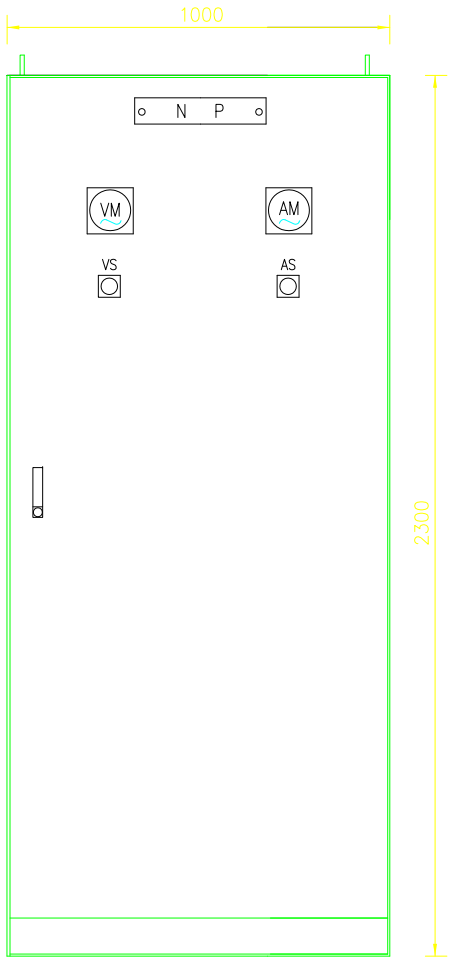

FRONT VIEW

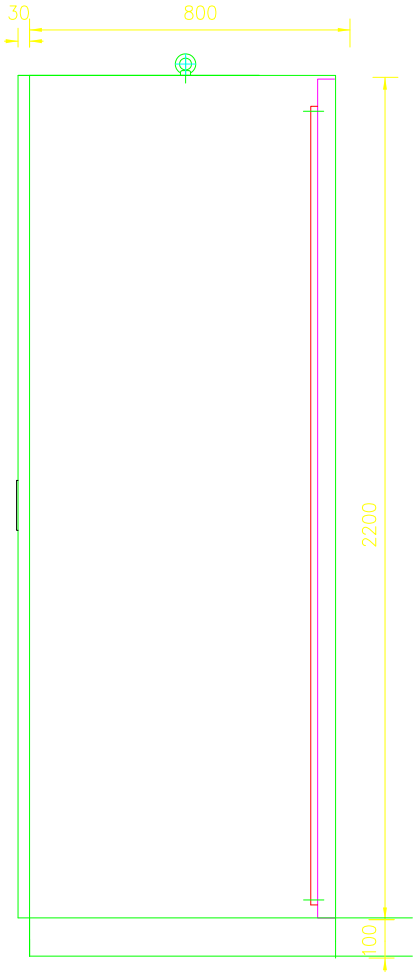

SIDE VIEW

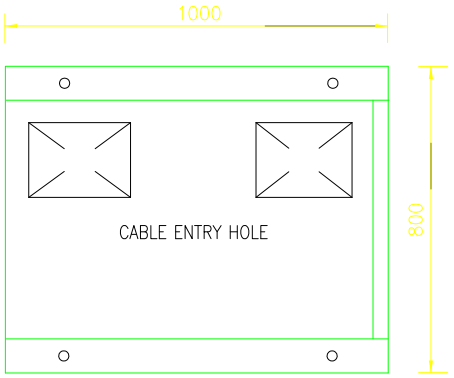

BUTTON VIEW

NO.	DATE	REVISIONS	PREPARER	CHECKER	REVIEWER	APPROVER
△						
△						
△						
△						

CUSTOMER

PROJECT

TITLE: POWER DISTRIBUTION PANEL
LAYOUT (1/2)

SCALE

DATE

DWG No.

SHEET No.

(주) 호원아이엔씨
HOWON Instrument & control Co., Ltd.

No.	ITEM	DESCRIPTION	REMARK
1	MCCB	T4N 320 PR221 DS	ABB
		T2N 250	ABB
		T2N-160	ABB
2	BUS BAR	8Tx25	
		5Tx20	
		3Tx15	
3	CURRENT TRANSFORMER (CT)		
4	POTENTIAL TRANSFORMER (PT)		
5	FUSE (F)		

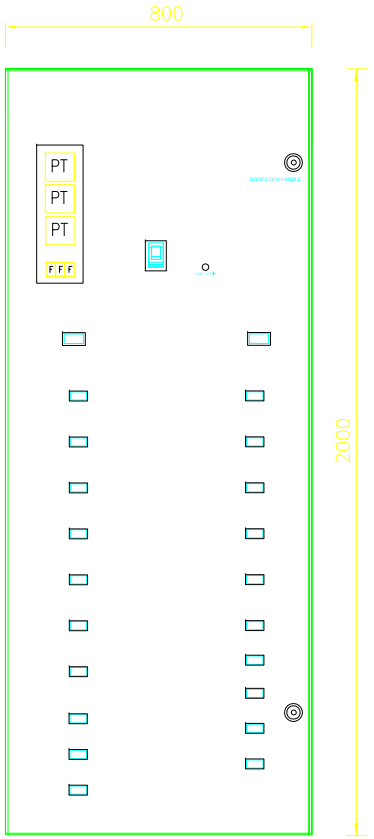

INNER FRONT VIEW

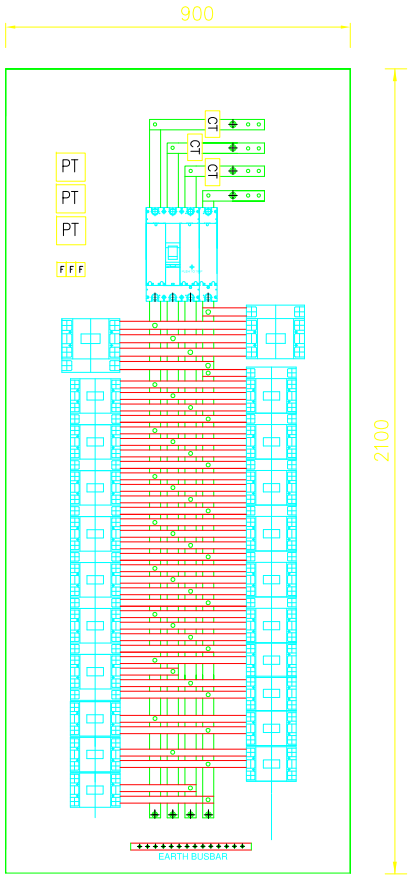

REMOVED P COVER

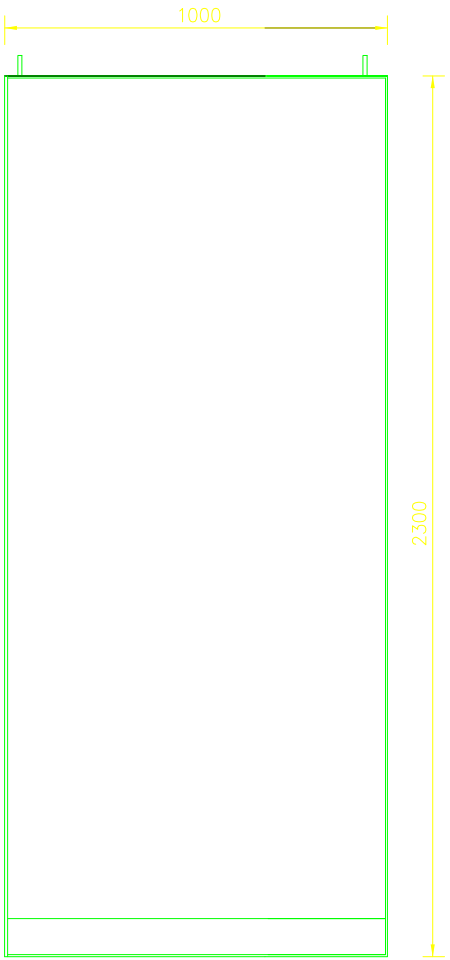

REAR VIEW

NO.	DATE	REVISIONS	PREPARER	CHECKER	REVIEWER	APPROVER
△						
△						
△						
△						

CUSTOMER

PROJECT

TITLE: POWER DISTRIBUTION PANEL

LAYOUT (2/2)

SCALE

DATE

DWG No.

SHEET No.

(주) 호원아이엔씨

HOWON Instrument & control Co., Ltd.

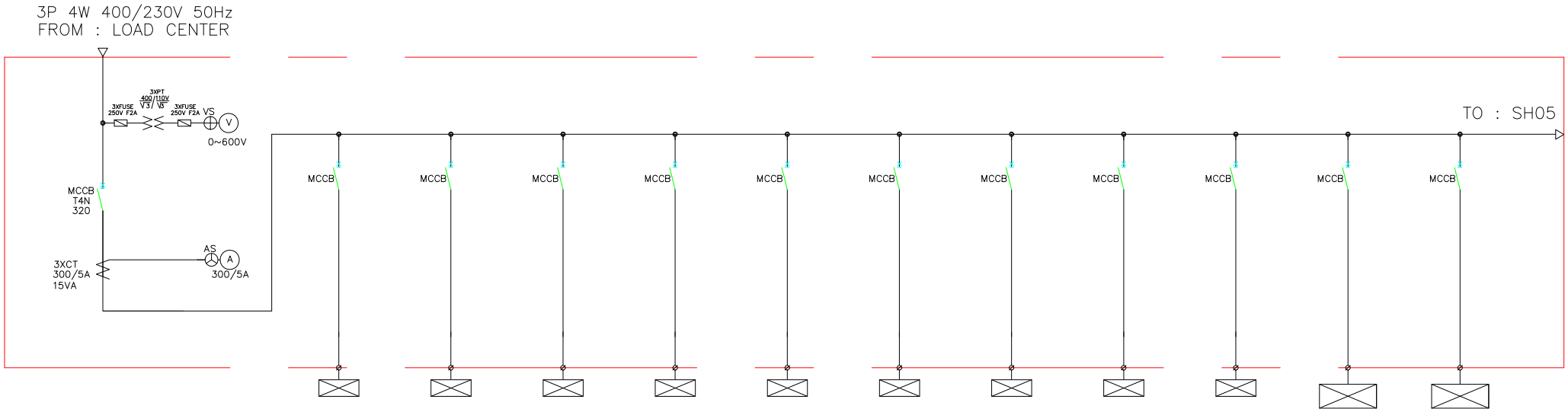

ITEM NO			MOV-01QHE31AA101	MOV-01QHE30AA101	MOV-01QHE10AA101	MOV-01LBA11AA101	MOV-01LBA11AA102	MOV-01LBA10AA101	MOV-01LBA10AA102	MOV-01LBA10AA103	MOV-01MBR20AA201	DIVETER DAMPER	CHEMICAL DOSING SYSTEM
SERVICE			ECOMIZER DRAIN MOV	EVAPORATOR DRAIN MOV	DRUM CONTINUOUS BLOW DOWN MOV	START UP VENT ISOLATION MOV	START UP VENT MOV	MAIN STEAM ISOLATION MOV	MAIN STEAM BY-PASS MOV	MAIN STEAM LINE DRAIN MOV	MAIN STACK DAMPER MOV	DIVETER DAMPER CONTROL PANEL	CHEMICAL DOSING SYSTEM
LOAD CAPACITY (KW)			0.25	0.25	0.25	4.00	1.60	4.00	0.12	0.12	2.65	78.3	1.50
MCCB AF/AT			T2N 160 TMD 1.6FF	T2N 160 TMD 1.6FF	T2N 160 TMD 1.6FF	T2N 160 TMD 16FF	T2N 160 TMD 10FF	T2N 160 TMD 16FF	T2N 160 TMD 1.6FF	T2N 160 TMD 1.6FF	T2N 160 TMD 10FF	T2N 160 TMD 250FF	T2N 160 TMD 10FF
MAGNETIC CONTACTOR	MCM (88)												
	MCD (88)												
	MCY (88)												
EOCR													
CT													
AM													
POWER TB (A)			4P 30A	4P 30A	4P 30A	4P 60A	4P 30A	4P 60A	4P 30A	4P 30A	4P 30A	4P 200A	4P 30A
POWER WIRE (Sq)			4	4	4	6	4	6	4	4	4	70	4
CONDENSER(UF)													
PBL / PL(S/S)													
Aux Relay(MY4 4a4b)													
SEQUENCE TYPE													
DOOR TYPE													
LOP PANEL TYPE													
OTHER'S													

NO.	DATE	REVISIONS	PREPARER	CHECKER	REVIEWER	APPROVER
△						
△						
△						
△						

CUSTOMER

PROJECT

TITLE: POWER DISTRIBUTION PANEL
ONE LINE DIAGRAM (1/2)

SCALE

DATE

DWG No.

SHEET No.

(주) 호원아이엔씨
HOWON Instrument & control Co., Ltd.

3P 4W 400/230V 60Hz
FROM : LOAD CENTER

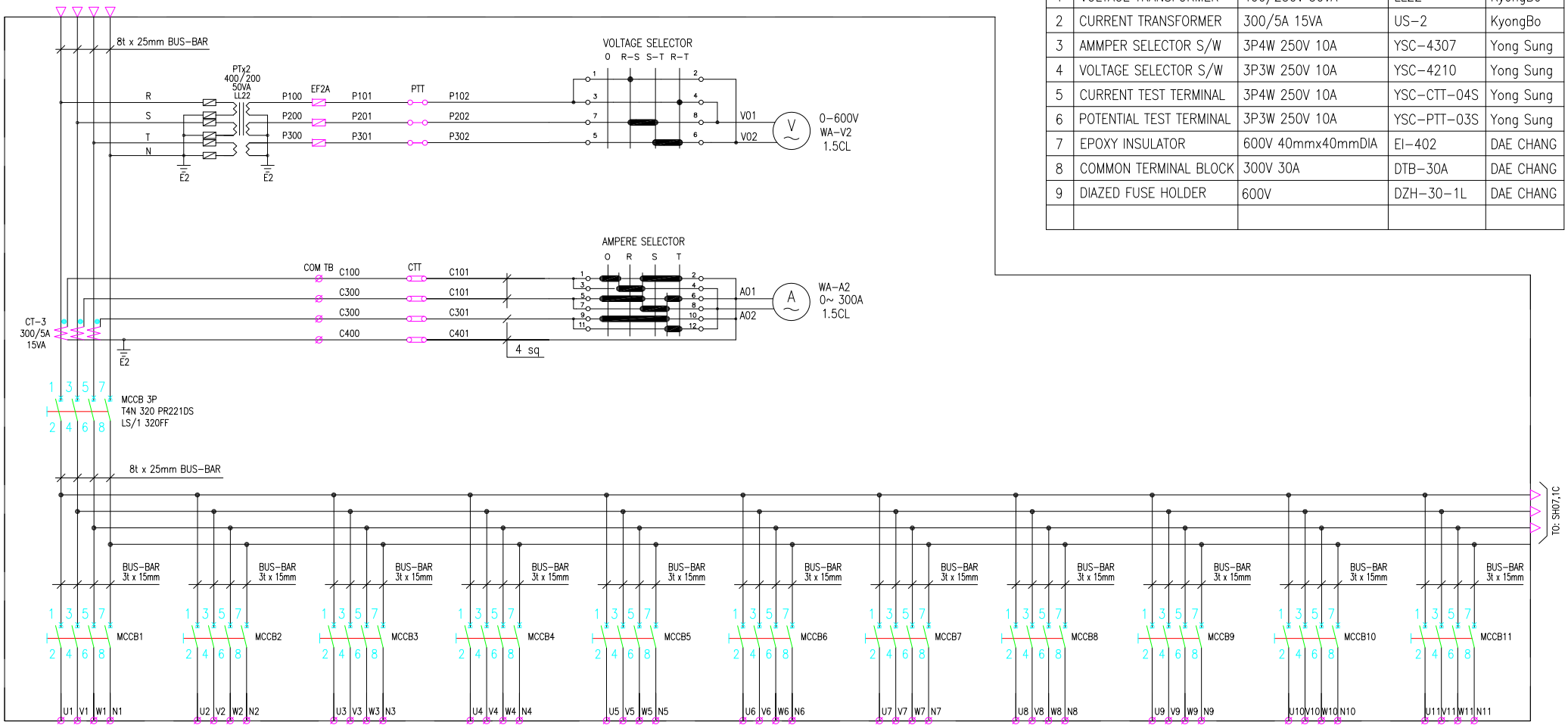

No.	ITEM	DESCRIPTION	TYPE	MAKER'S
1	VOLTAGE TRANSFORMER	400/230V 50VA	LL22	KyongBo
2	CURRENT TRANSFORMER	300/5A 15VA	US-2	KyongBo
3	AMMPER SELECTOR S/W	3P4W 250V 10A	YSC-4307	Yong Sung
4	VOLTAGE SELECTOR S/W	3P3W 250V 10A	YSC-4210	Yong Sung
5	CURRENT TEST TERMINAL	3P4W 250V 10A	YSC-CTT-04S	Yong Sung
6	POTENTIAL TEST TERMINAL	3P3W 250V 10A	YSC-PTT-03S	Yong Sung
7	EPOXY INSULATOR	600V 40mmx40mmDIA	EI-402	DAE CHANG
8	COMMON TERMINAL BLOCK	300V 30A	DTB-30A	DAE CHANG
9	DIAZED FUSE HOLDER	600V	DZH-30-1L	DAE CHANG

ECOMIZER DRAIN MOV	EVAPORATOR DRAIN MOV	DRUM CONTINUOUS BLOW DOWN MOV	START UP VNET ISOLATION MOV	START UP VENT MOV	MAIN STEAM ISOLATION MOV	MAIN STEAM BY-PASS MOV	MAIN STEAM LINE DRAIN MOV	MAIN STACK DAMPER MOV	DIVETER DAMPER CONTROL PANEL	CHEMICAL DOSING SYSTEM
MCCB 4P	MCCB 4P	MCCB 4P	MCCB 4P	MCCB 4P	MCCB 4P	MCCB 4P	MCCB 4P	MCCB 4P	MCCB 4P	MCCB 4P
T2N 160 TMD 1.6FF	T2N 160 TMD 1.6FF	T2N 160 TMD 1.6FF	T2N 160 TMD 16FF	T2N 160 TMD 10FF	T2N 160 TMD 16FF	T2N 160 TMD 1.6FF	T2N 160 TMD 1.6FF	T2N 160 TMD 10FF	T3N 250 TMD 250FF	T2N 160 TMD 10FF
415V 25KA	415V 25KA	415V 25KA	415V 25KA	415V 25KA	415V 25KA	415V 25KA	415V 25KA	415V 25KA	415V 25KA	415V 25KA
4sq	4sq	4sq	6sq	4sq	6sq	4sq	4sq	4sq	70sq	4sq

NO.	DATE	REVISIONS	PREPARER	CHECKER	REVIEWER	APPROVER
△						
△						
△						
△						

CUSTOMER

PROJECT

TITLE
POWER DISTRIBUTION PANEL
THREE LINE DIAGRAM (1/2)

SCALE

DATE

DWG No.

SHEET No.

(주) 호원아이엔씨
HOWON Instrument & control Co., Ltd.

THIS DRAWING AND THE DESIGN SHOWN ARE THE PROPERTY OF HOWON INC Co.,Ltd AND MUST NOT BE USED OR COPIED WITHOUT THEIT PERMISSION

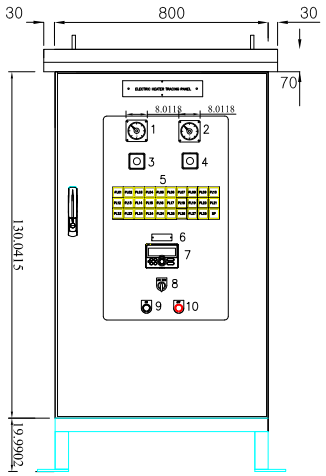

FRONT VIEW

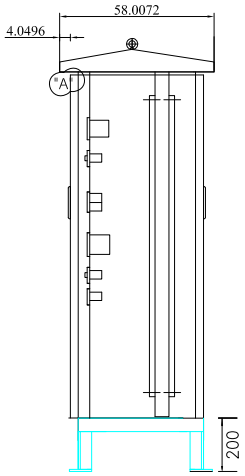

SIDE VIEW

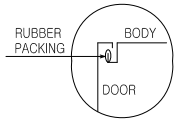

A-DETAIL

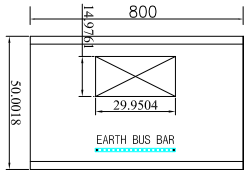

BOTTOM VIEW

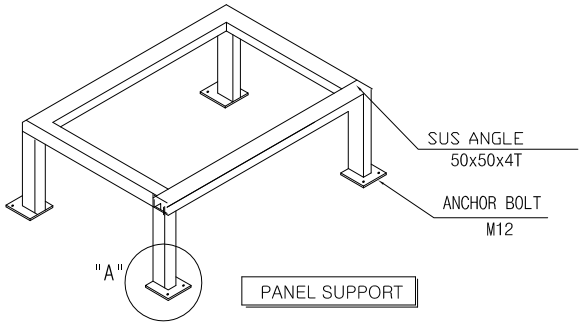

PANEL SUPPORT

NAME PLATE FOR SQUARE LAMP

NO.	NAME PLATE	DIMENSION	NO.	NAME PLATE	DIMENSION
PL01	ET – 1	27 x 27	PL15	ET – 15	27 x 27
PL02	ET – 2	27 x 27	PL16	ET – 16	27 x 27
PL03	ET – 3	27 x 27	PL17	ET – 17	27 x 27
PL04	ET – 4	27 x 27	PL18	ET – 18	27 x 27
PL05	ET – 5	27 x 27	PL19	ET – 19	27 x 27
PL06	ET – 6	27 x 27	PL20	ET – 20	27 x 27
PL07	ET – 7	27 x 27	PL21	ET – 21	27 x 27
PL08	ET – 8	27 x 27	PL22	CCTV	27 x 27
PL09	ET – 9	27 x 27	PL23	SAMPLING	27 x 27
PL10	ET – 10	27 x 27	PL24	OTHERS1	27 x 27
PL11	ET – 11	27 x 27	PL25	OTHERS2	27 x 27
PL12	ET – 12	27 x 27	PL26	SPARE	27 x 27
PL13	ET – 13	27 x 27	PL27	SPARE	27 x 27
PL14	ET – 14	27 x 27	PL28	SPARE	27 x 27

PARTS LIST

No	ITEM	Q'ty	DESCRIPTION	REMARKS
01	VOLT METER	1	WA-V2 0~600V	KYONGBO
02	AMPERE METER	1	WA-A2 0~100A	KYONGBO
03	VOLT SELECTOR	1	KH-301V-2	KUNHUNG
04	AMPERE SELECTOR	1	KH-301A-2	KYONGBO
05	SQUARE LAMP	28	KH5002-1L	KOINO
06	HEATER POWER	1	20 x 60	ALUMINIUM
07	TEMPERATURE INDICATING CONTROLLER	1	UM-33A	YOKOGAWA
08	SELECTOR SWITCH	1	KH-309	KOINO
09	ON PBL	1	KH-512-25	KOINO
10	OFF PBL	1	KH-512-25	KOINO

* REMARKS

1. PANEL DIMENSION : 800W*580D*1500H
2. BASE SIZE : 50*50*4T SUS ANGLE
3. TYPE : SELF STANDING
4. MATERIAL : SUS 304
5. THICKNESS : DOOR/OTHERS 2T
6. EARTH : BUS BAR
7. ENCLOSURE : IP54

NO.	REVISION	DATE	NAME
△			
△			
△			

(주) 호원아이엔씨
HOWON Instrument & control Co., Ltd.

DRAWN BY	DEGIGNED BY	PROJECT		DRAWING NO.	
CHECKED BY	APPROVED BY	TITLE	LAYOUT FOR PDP3		SCALE NONE

P/S : THIS DRAWING AND THE DESIGN SHOWN ARE THE PROPERTY OF HOWON INC Co.,Ltd AND MUST NOT BE USED OR COPIED WITHOUT THEIT PERMISSION

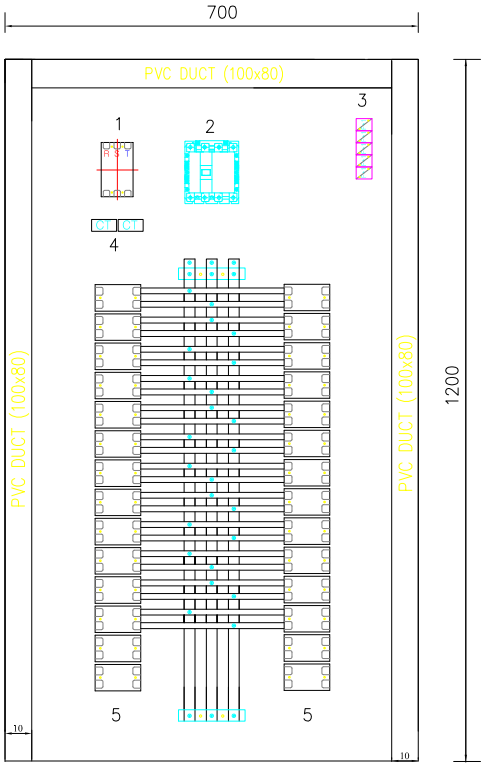

FRONT INNER VIEW

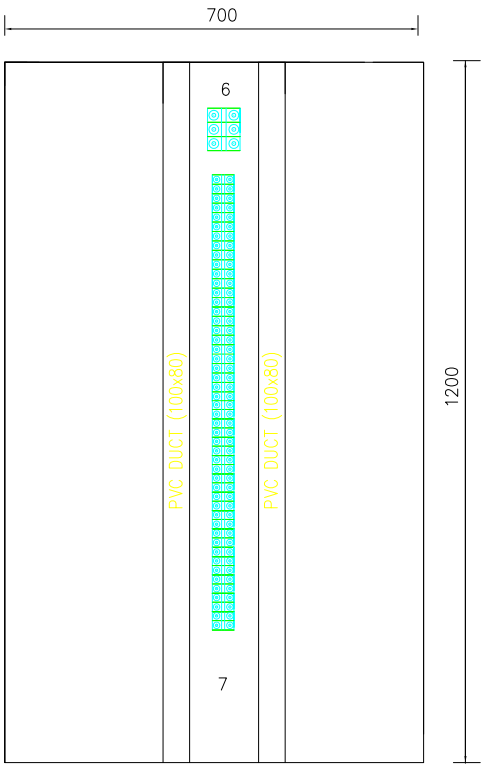

REAR INNER VIEW

PARTS LIST

No.	ITEM	DESCRIPTION	Q'TY	MODEL & SPEC	MAKER
1	52-00	NO FUSE BREAKER	1	ABS103/100AT	LSIS
2	MC-88	MAGNETIC CONTACTOR	1	GMC-100 AC220V	LSIS
3	FB-1	FUSE	5	250V,2A	
4	CT-1	CURRENT TRANSFORMER	1	KBD-62 100A 5VA	LIGHT STAF
5	52-01 ~ 28	E.L.C.B	28	EBS32Fb 20A 30mA	LSIS
6	PTB	TERMINAL BLOCK	1 LOT		
7	CTB	TERMINAL BLOCK	1 LOT		
*	ET	EARTH BUS-BAR	1 LOT	CU, 25 x 3t	

NO.	REVISION	DATE	NAME
△			
△			
△			

(주) 호원아이엔씨
HOWON Instrument & control Co., Ltd.

DRAWN BY	DEGIGNED BY	PROJECT		DRAWING NO.	
CHECKED BY	APPROVED BY	TITLE	INNER VIEW FOR PDP3		SCALE NONE

P/S : THIS DRAWING AND THE DESIGN SHOWN ARE THE PROPERTY OF HOWON INC Co.,Ltd AND MUST NOT BE USED OR COPIED WITHOUT THEIT PERMISSION

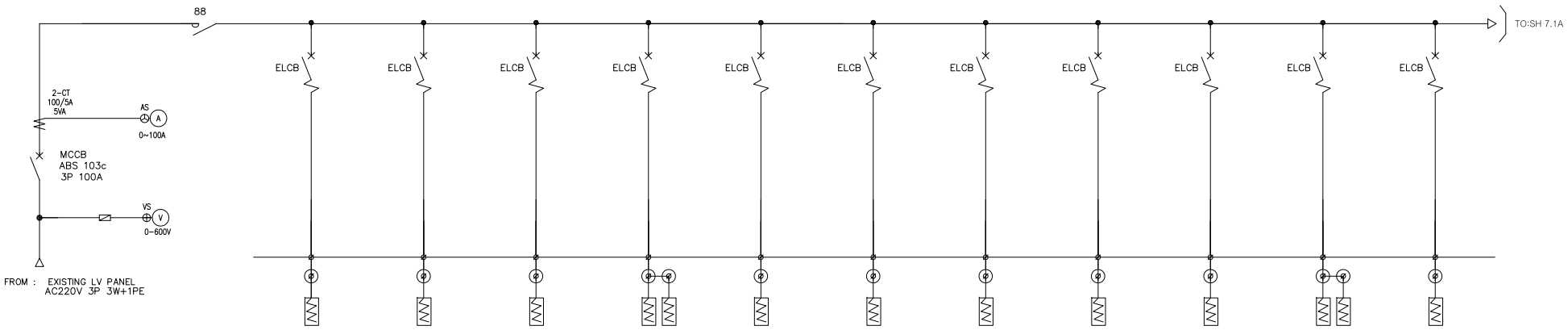

ITEM NO			ET - 1	ET - 2	ET - 3	ET - 4	ET - 5	ET - 6	ET - 7	ET - 8	ET - 9	ET - 10	ET - 11
SERVICE		MAIN M.G	HEATER	HEATER	HEATER	HEATER	HEATER	HEATER	HEATER	HEATER	HEATER	HEATER	HEATER
LOAD CAPACITY (KW)		15	0.045	0.045	0.180	0.450	0.300	0.195	0.195	0.225	0.810	0.405	0.645
MCCB AF/AT		ABS103c 100A	EBS32Fb 20A 30mA	EBS32Fb 20A 30mA	EBS32Fb 20A 30mA	EBS32Fb 20A 30mA	EBS32Fb 20A 30mA	EBS32Fb 20A 30mA	EBS32Fb 20A 30mA	EBS32Fb 20A 30mA	EBS32Fb 20A 30mA	EBS32Fb 20A 30mA	EBS32Fb 20A 30mA
MAGNETIC CONTACTOR	MCM (88)	GMC-100											
	MCD (88)												
	MCY (88)												
EOCR													
CT													
AM													
POWER TB (A)		2P 100A	2P 25A	2P 25A	2P 25A	2P 25A	2P 25A	2P 25A	2P 25A	2P 25A	2P 25A	2P 25A	2P 25A
POWER WIRE (Sq)		10	4	4	4	4	4	4	4	4	4	4	4
CONDENSER(UF)													
PBL / PL(S/S)													
Aux Relay			1a	1a	1a	1a	1a	1a	1a	1a	1a	1a	1a
SEQUENCE TYPE													
DOOR TYPE													
LOP PANEL TYPE													
OTHER'S													
REMARK													

NO.	REVISION	DATE	NAME
△			
△			
△			

(주) 호원아이엔씨
HOWON Instrument & control Co., Ltd.

DRAWN BY	DEGIGNED BY	PROJECT		DRAWING NO.	
CHECKED BY	APPROVED BY	TITLE	SINGLE LINE1 FOR PDP3		SCALE NONE

P/S : THIS DRAWING AND THE DESIGN SHOWN ARE THE PROPERTY OF HOWON INC Co.,Ltd AND MUST NOT BE USED OR COPIED WITHOUT THEIT PERMISSION

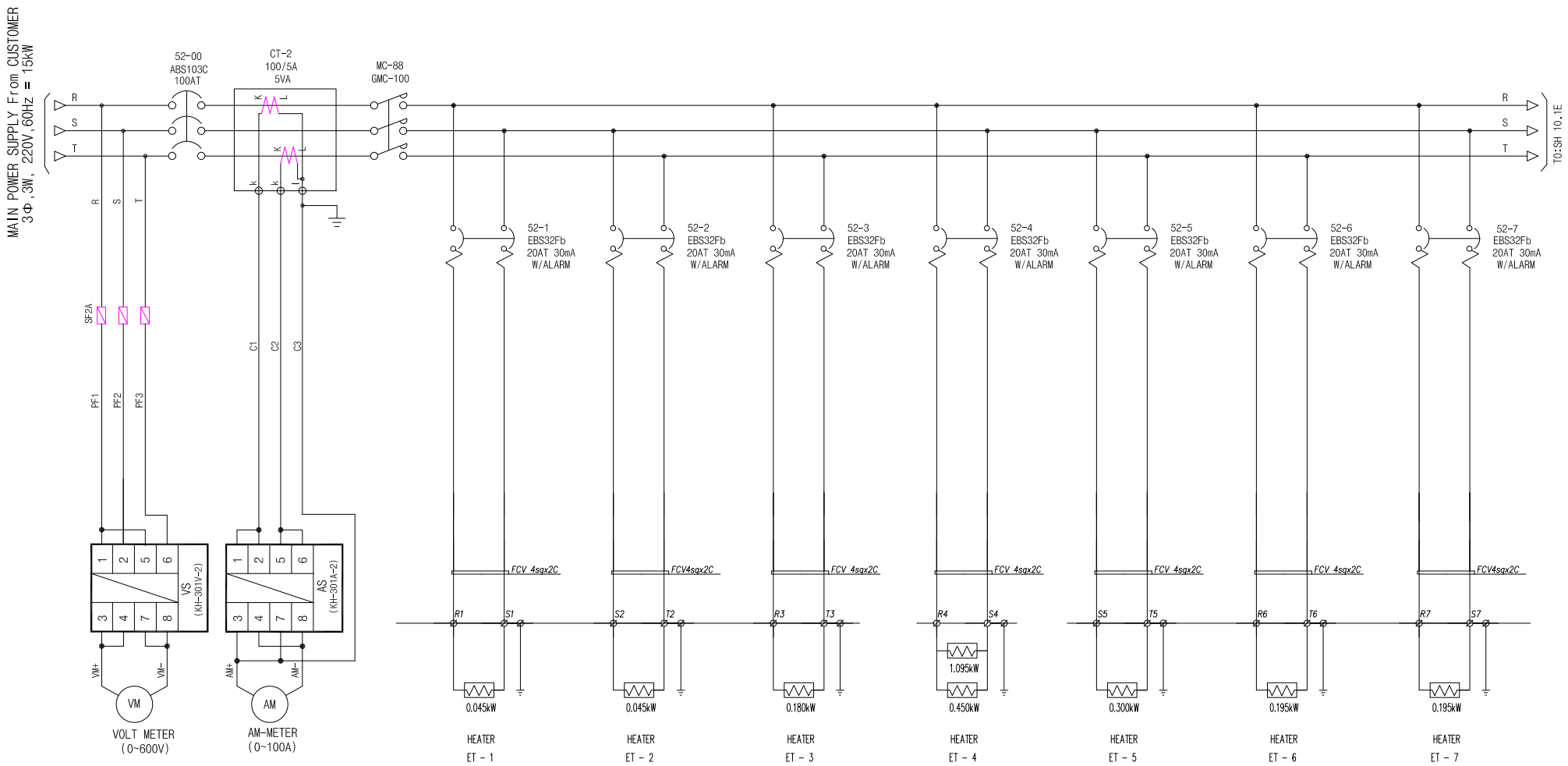

NO.	REVISION	DATE	NAME
△			
△			
△			

(주) 호원아이엔씨
HOWON Instrument & control Co., Ltd.

DRAWN BY	DEGIGNED BY	PROJECT		DRAWING NO.	
CHECKED BY	APPROVED BY	TITLE	THREE LINE1 FOR PDP3		SCALE NONE

P/S : THIS DRAWING AND THE DESIGN SHOWN ARE THE PROPERTY OF HOWON INC Co.,Ltd AND MUST NOT BE USED OR COPIED WITHOUT THEIT PERMISSION

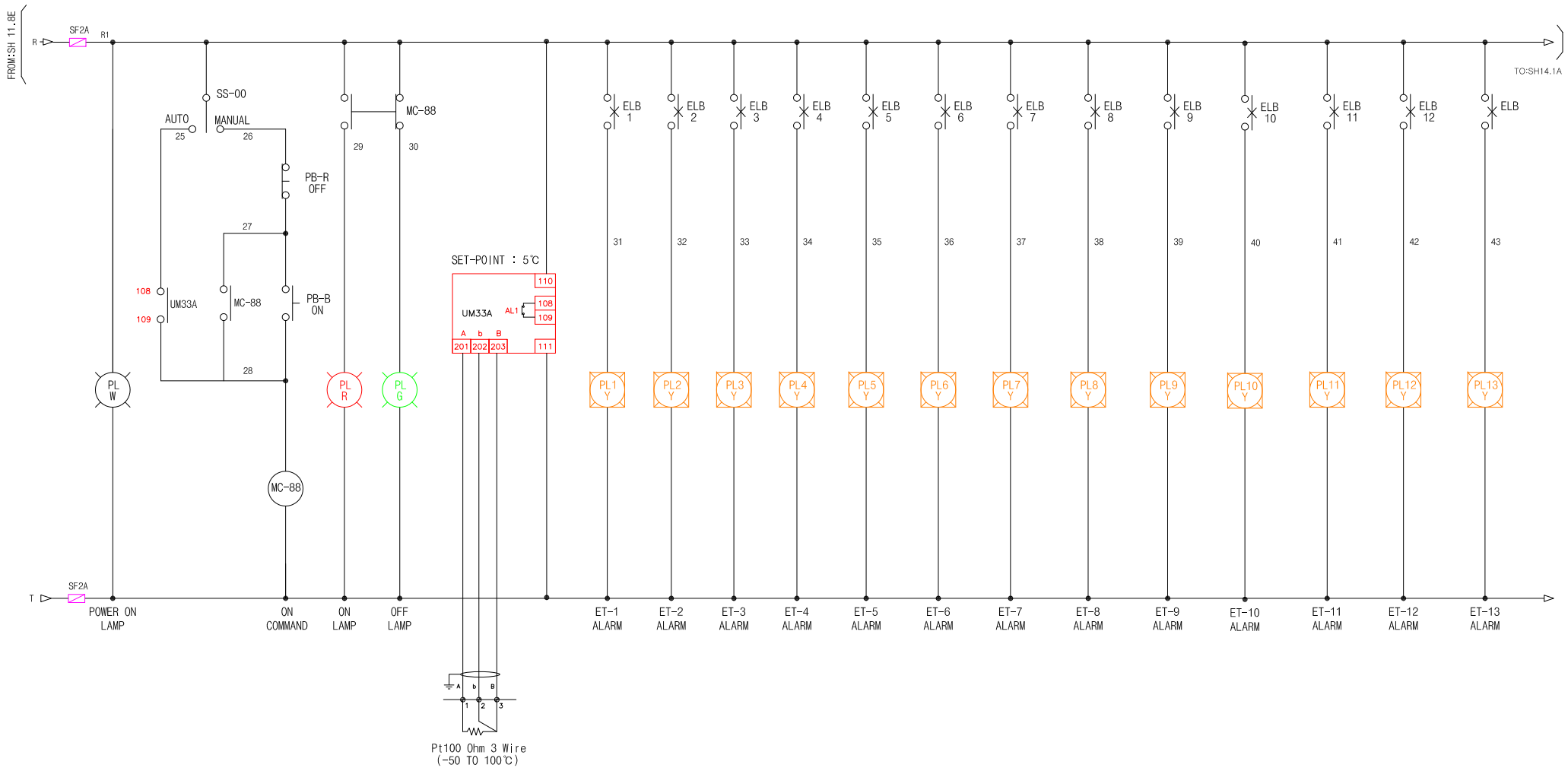

NO.	REVISION	DATE	NAME
△			
△			
△			

(주) 호원아이엔씨
HOWON Instrument & control Co., Ltd.

DRAWN BY	DEGIGNED BY	PROJECT		DRAWING NO.	
CHECKED BY	APPROVED BY	TITLE	SEQUENCE1 FOR PDP3		SCALE NONE

NO.	UNIT PART NAME	DESCRIPTION	NO.	UNIT PART NAME	DESCRIPTION
01.	MAIN BREAKER	3P,203AF/150AT	06.	BRANCH BREAKER	3P,103AF/50AT
02.	VOLT-METER	–	07.	BRANCH BREAKER	3P,103AF/50AT
03.	SELECTOR SWITCH	VS(3P 3W)	08.	BRANCH BREAKER	3P,103AF/50AT
04.	AM-METER	–	09.	BRANCH BREAKER	3P,103AF/50AT
05.	SELECTOR SWITCH	AS(3P 3W)	10.	BRANCH BREAKER	3P,103AF/50AT

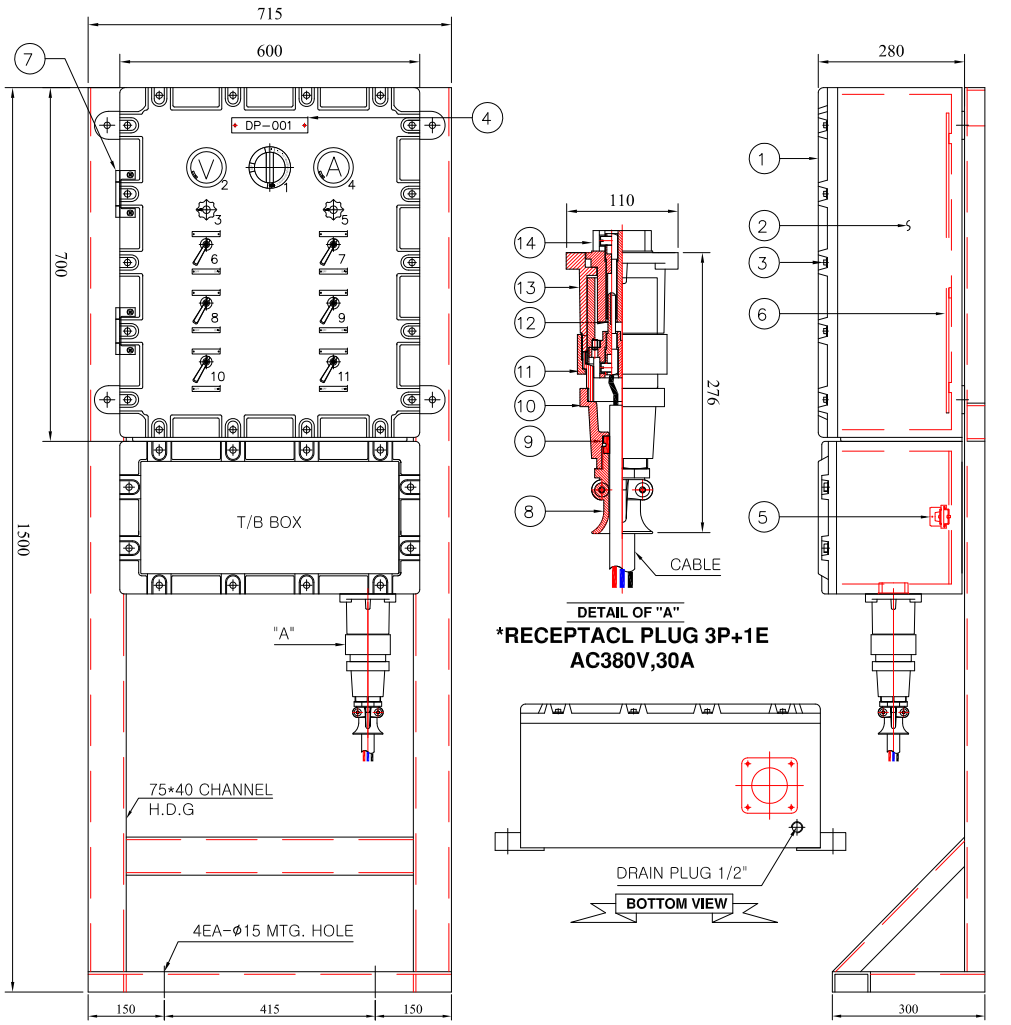

*THE ALLOWABLE LIMIT IN ABOVE DIMENSION TO BE WITH IN ±3%

REV. NO.	DATE	DESCRIPTION	REV'D BY	CHE'D BY	APP'D BY
△					
△					

ITEM NO.		Q'TY	1 SET
APPLICATION AREA	☐ OUTDOOR USE ■ INDOOR USE	☐ NON-HAZARDOUS ■ HAZARDOUS LOCATION	
ACCESSOR OPTION	■ WITHOUT SUNSHADE COVER ☐ WITH SUNSHADE COVER	☐ WALL MOUNTING ■ SELF-STAND	
HUB SCHEDULE	BOTTOM	DRAIN PLUG ½"	
NAME PLATE	■ LAMINATED PLASTIC ☐ ALUMINIUM	SIZE ☐ 25 * 120 ■ 30 * 150	HUB THREAD ☐ PF ☐ NPS ■ NPT ☐ PG

NOTE

1. BOLT WASHER & NUTS SHALL BE MADE OF STAINLESS STEEL
2. THE ALLOWABLE LIMIT IN ABOVE DIMENSION TO BE WITHIN ±5%
3. EPOXY POWDER PAINTED (MUNSELL NO. EX4504(S) 5Y7/1)
4. COLOR OF EACH PHASE
   ☐ DOMESTIC : PHASE "R"(RED), "S"(WHITE), "T"(BLUE), "N"(BLACK)
   ■ IEC : PHASE "R"(RED), "S"(YELLOW), "T"(BLUE), "N"(BLACK)
5. MAIN BREAKER : NORMAL : (01)-3P,203AF/150AT(ABS203b)
   BRANCH BREAKER : NORMAL : (05)-3P,103AF/50AT(ABS103b)
6. POWER SUPPLY : 3PH, 3W, AC 380V/220V , 50HZ

MARKING of CONNECTION

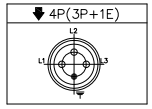

NO.	DESCRIPTION	MATERIAL	REMARK
14.	RECEPTACLE HOUSING	CAST ALUMINIUM ALLOY	
13.	FEMAIL PLUG CONTACTOR	BAKE-LITE, W/PIN(STAINLESS STEEL)	
12.	MAIL PLUG CONTACTOR	BAKE-LITE, W/PIN(STAINLESS STEEL)	
11.	PLUG HOUSING LOCKING	CAST ALUMINIUM ALLOY	
10.	PLUG HOUSING	CAST ALUMINIUM ALLOY	
09.	CABLE PACKING	RUBBER	
08.	CABLD GLAND	CAST ALUMINIUM ALLOY	
07.	HINGE	STAINLESS STEEL	
06.	TERMINAL BLOCK	20A(10P*1), 60A(3P*3), 100A(3P*2)	
05.	INNER PLATE	BAKELITE PLATE 5T	
04.	NAME PLATE	LAMINATED PLASTIC	
03.	COVER BOLT & WASHER	STAINLESS STEEL	M10*1.5P
02.	BODY	CAST ALUMINIUM ALLOY	
01.	COVER	CAST ALUMINIUM ALLOY	

TITLE	LAYOUT OF DISTRIBUTION PANEL #6 (DP-006)	CLASS of PROTECTION	FLAME-PROOF TYPE (Ex d IIB T6)
PROJECT NAME		DWG NO.	

(주) 호원아이엔씨
HOWON Instrument & control Co., Ltd.

SCALE	NONE	APPROVED BY	
UNIT	mm	CHECKED BY	
DATE		DRAWING BY	

(SIZE A3 : 420*297)

REV. NO.	DATE	DESCRIPTION	REV'D BY	CHE'D BY	APP'D BY
△					
△					

DISTRIBUTION PANEL #6(DP-006)
3P 3W 440V 60HZ, PE
From : MCC

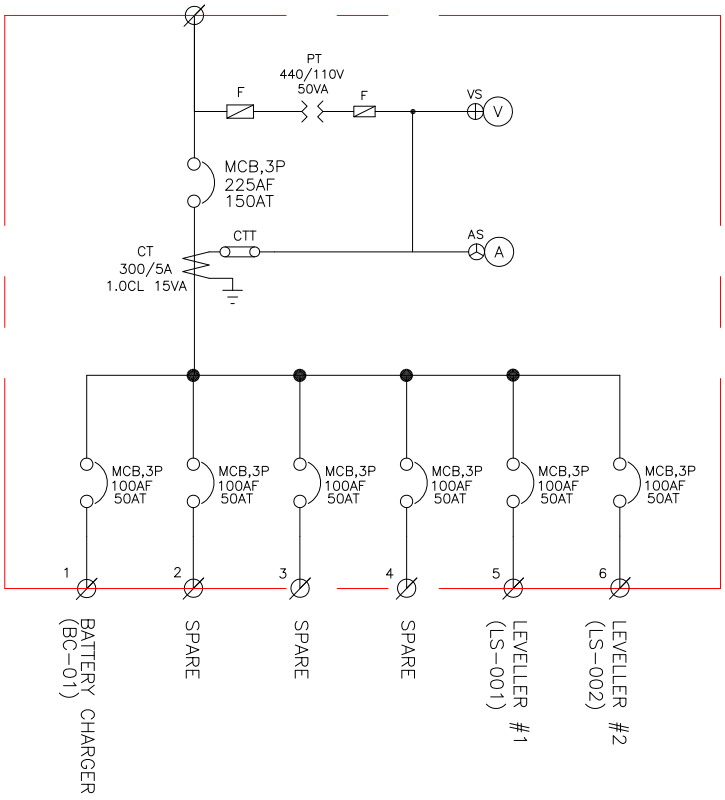

TITLE	WIRE DIAGRAM OF DISTRIBUTION PANEL #1(DP-006)		CLASS of PROTECTION	FLAME-PROOF TYPE (Ex d IIB T6)	
PROJECT NAME			DWG NO.		
(주) 호원아이엔씨 HOWON Instrument & control Co., Ltd.		SCALE	NONE	APPROVED BY	
		UNIT	mm	CHECKED BY	
		DATE		DRAWING BY	

*THE ALLOWABLE LIMIT IN ABOVE DIMENSION TO BE WITH IN ±3%

(SIZE A3 : 420*297)

PDP-01

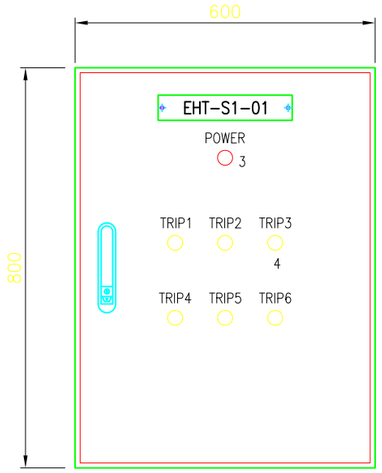

FRONT VIEW

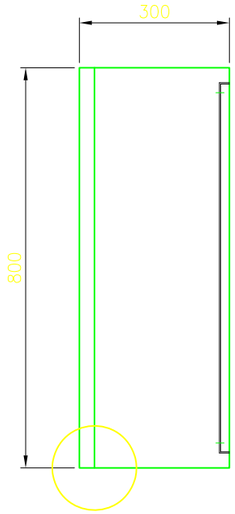

"C"

SIDE VIEW

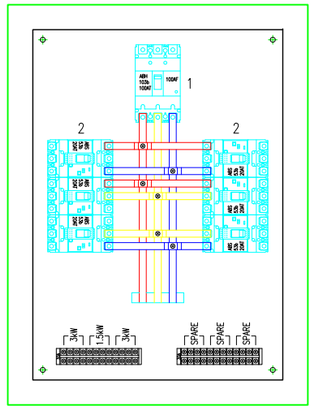

INNER VIEW

MATERIAL LIST

NO.	DESCRIPTION	SPECIFICATION	Q'ty	MAKER
1	ELCB	ABS 103b 100AF/100A	1EA	LS IND
2	ELCB	ABS 53b 50AF/20A	6EA	LS IND
3	PILOT LAMP	30, AC 220V RED COLOR	1EA	KOINO
4	PILOT LAMP	30, AC 220V YELLOW COLOR	6EA	KOINO
5				
6				
7				
8				
9				
10				

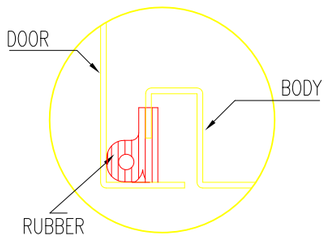

"C" DETAIL

PDP-02

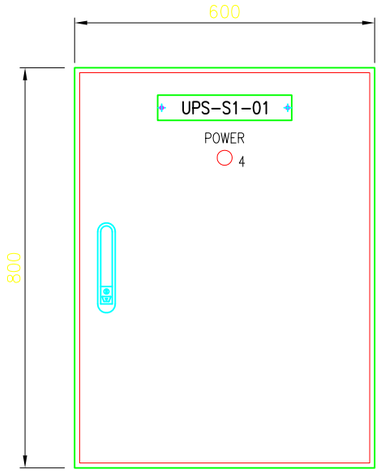

FRONT VIEW

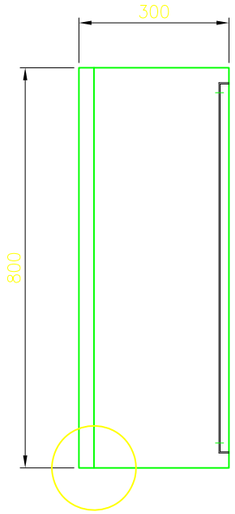

"C"

SIDE VIEW

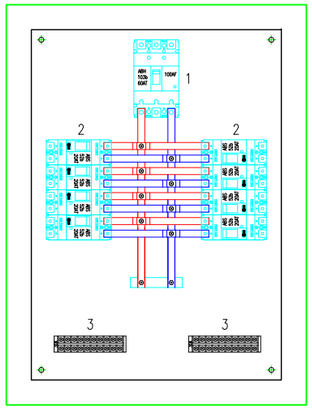

INNER VIEW

MATERIAL LIST

NO.	DESCRIPTION	SPECIFICATION	Q'ty	MAKER
1	MCCB	ABS 103b 60AF/100A	1EA	LS IND
2	MCCB	ABS 52b 50AF/20A	8EA	LS IND
3	TERMINAL	30A 10P	2EA	KOINO
4	PILOT LAMP	30, AC 220V RED COLOR	1EA	KOINO
5				
6				
7				
8				
9				
10				

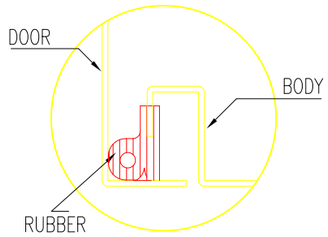

"C" DETAIL

REVISIONS	DATE	DWN	CHKD	APPD

(주) 호원아이엔씨
HOWON Instrument & control Co., Ltd.

PROJECT NO.	PROJECT
DRAWN	TITLE
CHECKED	PDP #3
APPROVED	
APPROVED	
DATE DRAWN / SCALE NONE	DWG.NO. / REV. 1

DWG. NO.